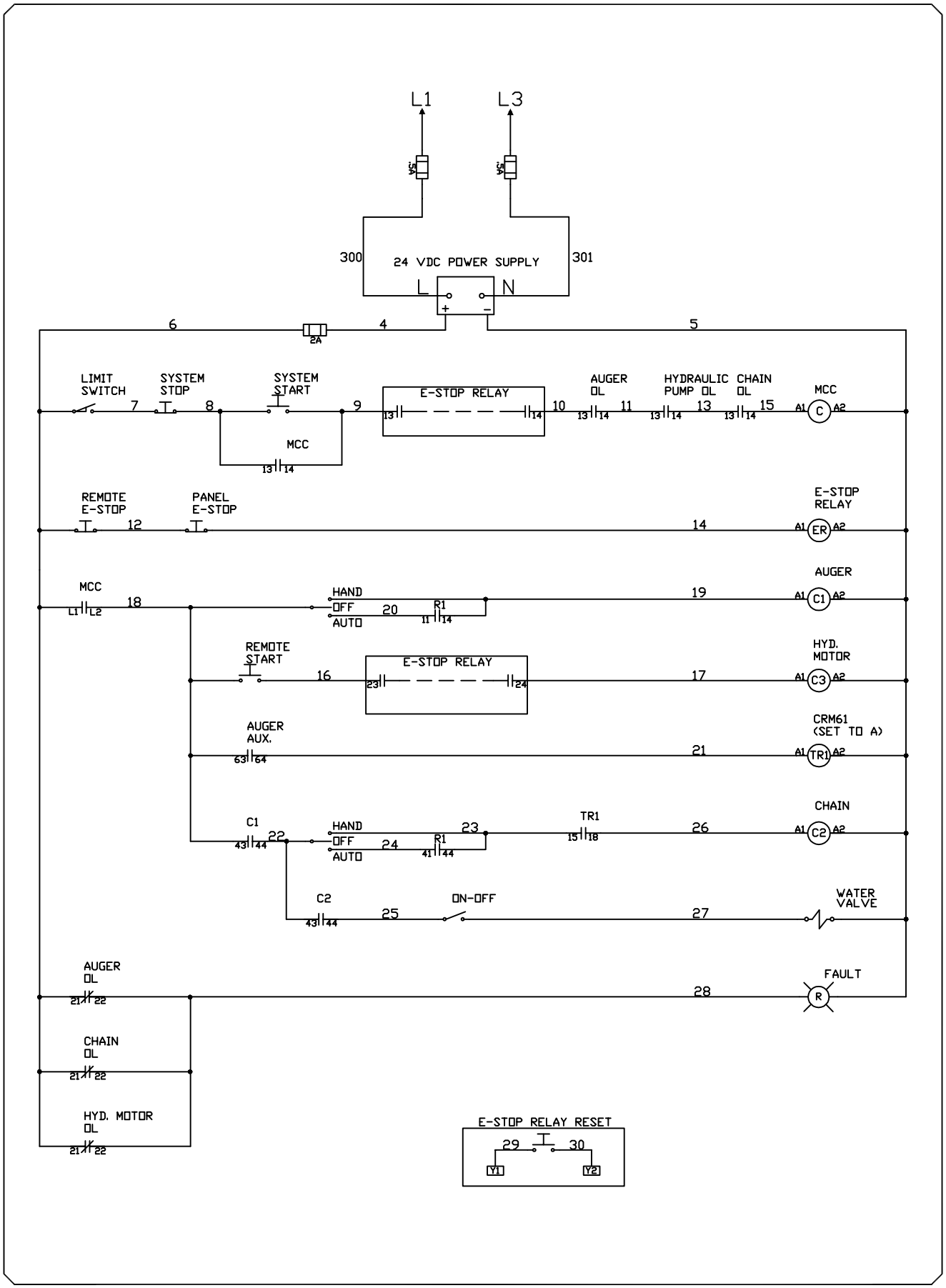

BALE_PROCESS

2 OF 3

BALE PROCESSOR

AMC

ADVANCED MACHINE CONTROL, LLC

KALCO CORP.